236 E. Rodriguez Senior Avenus, Barangay Don Manuel, Quezon City, Metro Manila, Philippines 1113.
Tel: (+632) 740 7509 E-mail: info@kuysen.com

KUYSEN ENTERPRISES, INC.

# SPECIFICATION SHEET - fittings

| | |
|---|---|
| **BRAND:** | hansgrohe |
| **ORIGIN:** | Germany |
| **SERIES:** | **Shower Pipes** |
| **PRODUCT DESCRIPTION:** | Raindance Select S shower pipe set 420. Thermostat Ecostat Comfort. Flow rate PowderRain(at 3 bar):16 l/min |
| **MODEL No.** | 27633 000 |
| **FINISH/COLOUR:** | Chrome-plated |
| **DIMENSIONS:** | |
| **OPTIONAL MATCHING PARTS:** | |

**Product Photo:**

**Technical Informations:** Suitable for continous flow water heater

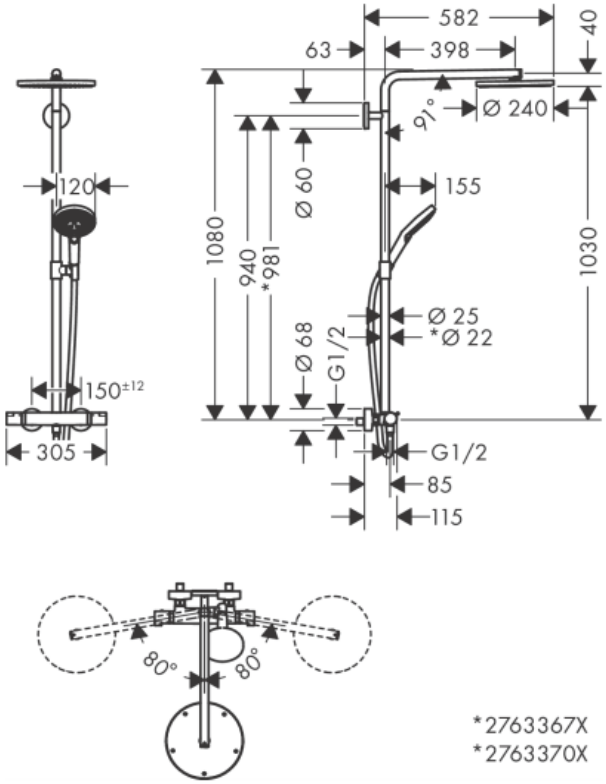


| | |
|---|---|
| **REMINDER:** | Pipe flushing must be done before faucets are installed. Failure to do so voids the warranty. |
| | Do not use cleaners containing abrasive cleansers, ammonia, bleach, acids, waxes, alcohol, solvents or other products not recommended for chrome. |
| | All information is for reference only, installation shall always be based on the actual product delivered. |